230-500 CAK/W33

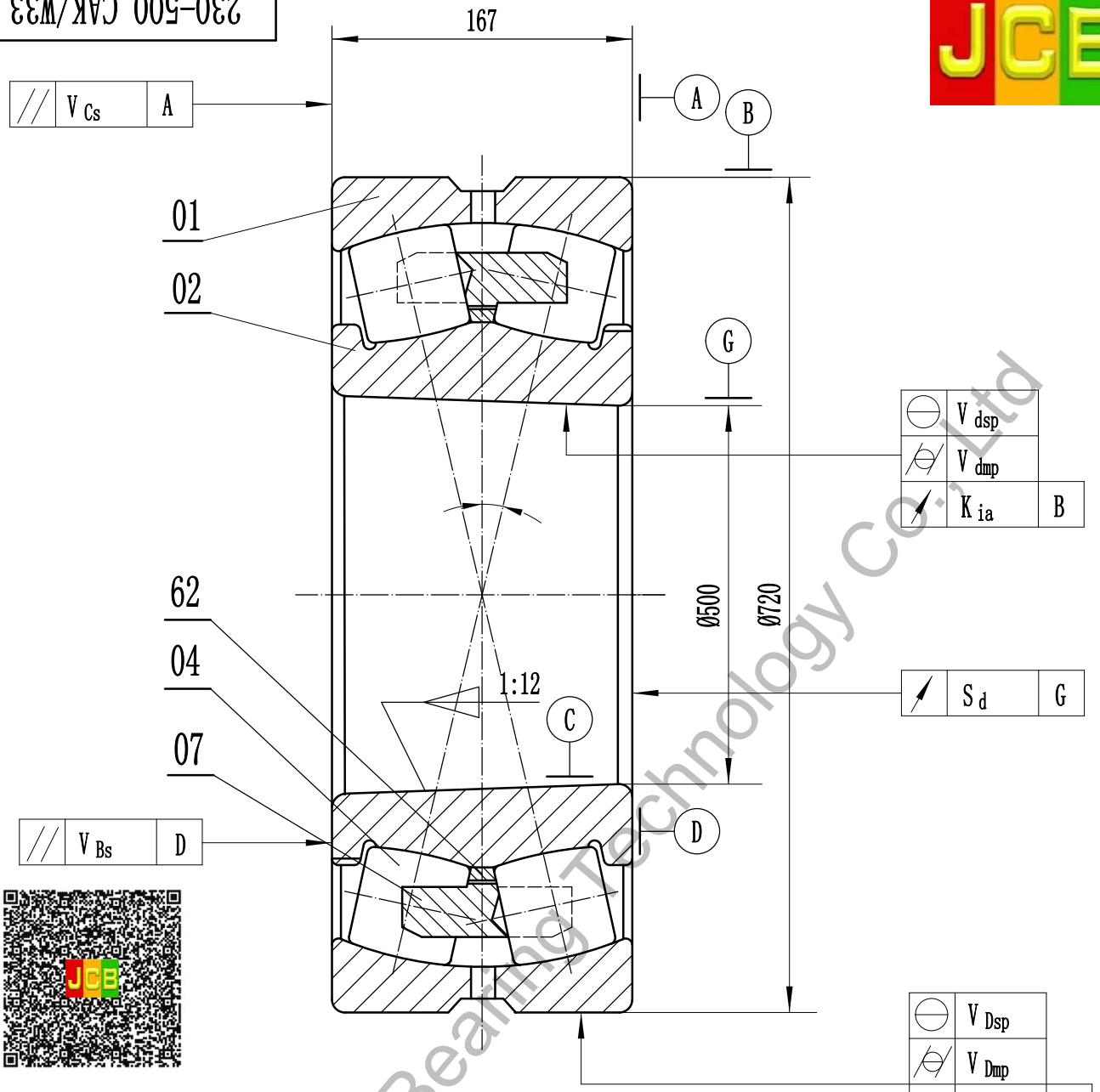


1、Tolerance of running accuracy are according to relevant state standard;

2、The value of the basic group of radial clearance:min **** max ****;

3、Rated load: Cr= **** kN Cor= **** kN。

| No. | Designation | Qty | Material | unit Weight (kg) | toatl Weight (kg) | Remark |
|---|---|---|---|---|---|---|
| 62 | Guide ring | | Steel 20—GB/T699 | | | |
| 07 | Cage | | Brass CuZn39Pb2-EN 1652:1997 | | | |
| 04 | Roller | | Steel 100CrMnSi6-4—ISO 683-17:1999 | | | |
| 02 | Inner ring | | Steel 100CrMnSi6-4—ISO 683-17:1999 | | | |
| 01 | Outer ring | | Steel 100CrMnSi6-4—ISO 683-17:1999 | | | |


Luoyang JCB Bearing Technology Co., Ltd
Contact information
Company Address : No. 285, Fenghua road,
Luoyang, Henan, China.
Postal code : 471000
Phone :86-379-68611678
Fax : 86-379-68611679
E-mail: sales@jcb-bearing.com
Reserved E-mail: sales@sphericalrollerbearing.net
Website: www.jcb-bearing.com
www.sphericalrollerbearing.net


Spherical Roller Bearing

230-500 CAK/W33

| | Weight (kg) | Scale |
|---|---|---|
| S | | ——— |

Total page 5 | Page No. 1

Luoyang JCB Bearing Technology Co., Ltd

Luoyang JCB Bearing Technology Co., Ltd